This is a digital copy of a book that was preserved for generations on library shelves before it was carefully scanned by Google as part of a project to make the world's books discoverable online.

It has survived long enough for the copyright to expire and the book to enter the public domain. A public domain book is one that was never subject to copyright or whose legal copyright term has expired. Whether a book is in the public domain may vary country to country. Public domain books are our gateways to the past, representing a wealth of history, culture and knowledge that's often difficult to discover.

Marks, notations and other marginalia present in the original volume will appear in this file - a reminder of this book's long journey from the publisher to a library and finally to you.

Usage guidelines

Google is proud to partner with libraries to digitize public domain materials and make them widely accessible. Public domain books belong to the public and we are merely their custodians. Nevertheless, this work is expensive, so in order to keep providing this resource, we have taken steps to prevent abuse by commercial parties, including placing technical restrictions on automated querying.

We also ask that you:

+ *Make non-commercial use of the files* We designed Google Book Search for use by individuals, and we request that you use these files for personal, non-commercial purposes.

+ *Refrain from automated querying* Do not send automated queries of any sort to Google's system: If you are conducting research on machine translation, optical character recognition or other areas where access to a large amount of text is helpful, please contact us. We encourage the use of public domain materials for these purposes and may be able to help.

+ *Maintain attribution* The Google "watermark" you see on each file is essential for informing people about this project and helping them find additional materials through Google Book Search. Please do not remove it.

+ *Keep it legal* Whatever your use, remember that you are responsible for ensuring that what you are doing is legal. Do not assume that just because we believe a book is in the public domain for users in the United States, that the work is also in the public domain for users in other countries. Whether a book is still in copyright varies from country to country, and we can't offer guidance on whether any specific use of any specific book is allowed. Please do not assume that a book's appearance in Google Book Search means it can be used in any manner anywhere in the world. Copyright infringement liability can be quite severe.

About Google Book Search

Google's mission is to organize the world's information and to make it universally accessible and useful. Google Book Search helps readers discover the world's books while helping authors and publishers reach new audiences. You can search through the full text of this book on the web at `http://books.google.com/`

IDENER LIBRARY
X GZU4 6

Digitized by Google

~~154.62~~

Sci 1085.70

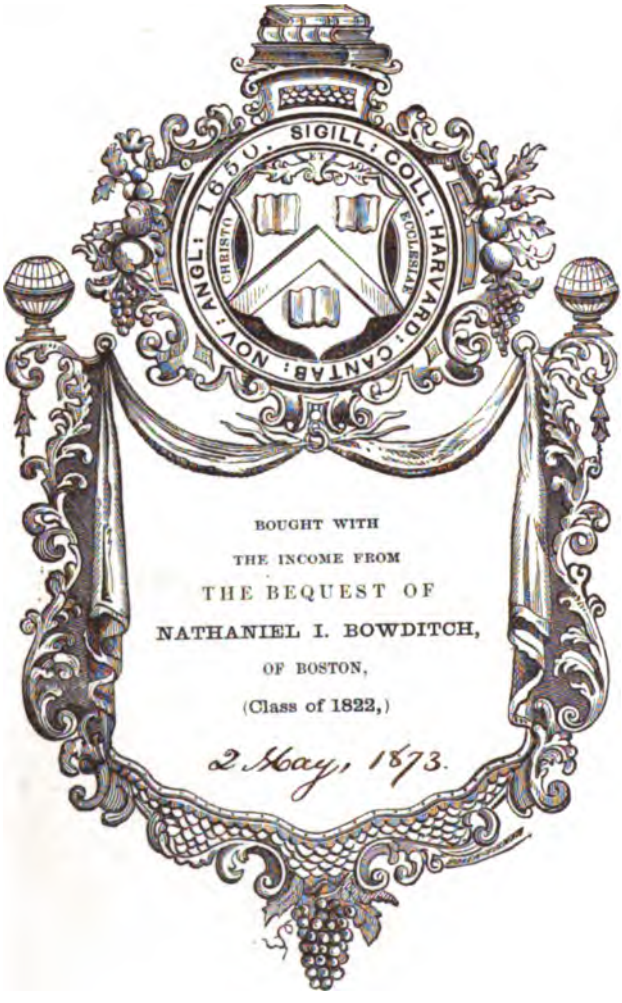

SCIENCE CENTER LIBRARY

Digitized by Google

Digitized by Google

Digitized by Google

REPERTORIUM

FÜR

PHYSIKALISCHE TECHNIK

FÜR

MATHEMATISCHE UND ASTRONOMISCHE

INSTRUMENTENKUNDE.

HERAUSGEGEBEN

VON

DR. PH. CARL,
PRIVATDOCENT AN DER UNIVERSITÄT MÜNCHEN.

ERSTER BAND.

ATLAS.

TAFEL I BIS XXXVII.

MÜNCHEN, 1866.
VERLAG VON R. OLDENBOURG.

Digitized by Google

Sci1085.70

1873, may 2.
Bowditch Fund.

Digitized by Google

Verzeichniss der Figurentafeln.

Taf. I bis VII zu der Abhandlung: Die Wage von Ph. Carl. Pag. 1—41.

Taf. VIII. Cazin's Electrodynamische Wage. Pag. 42—45.

Taf. IX. v. Vivenot's Verdunstungsmesser. Pag. 103—130.

Taf. X. v. Littrow's Heliostat. Pag. 46—56.

Taf. XI bis XVII zu der Abhandlung: Ueber Spectralapparate von Dr. Voit. Pag. 65—102.

Taf. XVIII Fig. 1. Poggendorff's Quecksilberluftpumpe. Pag. 137.
Fig. 2. Deleuil, Luftpumpe. Pag. 334.
Fig. 3. Morren's Quecksilberluftpumpe. Pag. 141.

Taf. XIX Fig. 1 bis 4. Jolly's Quecksilberluftpumpe. Pag. 144.
Fig. 5 bis 7. Thomson's Polarisationsbatterie. Pag. 171.

Taf. XX. Steinheil's Meridiankreis. Pag. 149.

Taf. XXI. Lasell's Telescop. Pag. 162.

Taf. XXII Fig. 1—3, XXIII, XXIV, XXV. Zöllner's Astrophotometer. Pag. 187.

Taf. XXII Fig. 4. Grüel's Gyrotrop. Pag. 254.
Fig. 5. Breithaupt's Lagerjustirung. Pag. 324.
Fig. 6. Breithaupt's Axenklemme. Pag. 324.

Taf. XXVI. Windmesser der Pariser Sternwarte. Pag. 200.

Taf. XXVII bis XXXII zu der Abhandlung: Ueber Pantographen von E. Fischer. Pag. 257—276.

Taf. XXXIII, XXXIV zu der Abhandlung: Ueber Formen und Principien der verschiedenen Heliotrope von E. Fischer. Pag. 277—285.

Taf. XXXV Fig. 1—4. Registrirende meteorologische Instrumente an der Sternwarte zu Lissabon. Pag. 293.
Fig. 5. Barral's Regenmesser. Pag. 331.

Taf. XXXVI. Die neuen grossen Instrumente der Pariser Sternwarte. Pag. 299.

Taf. XXXVII Fig. 1—3. Foucault's Kohlenlicht-Regulator. Pag. 289 bis 291.
Fig. 4 u. 5 Jelett's Polarisationsinstrument. Pag. 328—329.
Fig. 6 und 7. Braun's Nephoscop. Pag. 338—341.
Fig. 8. Carl's Commutator. Pag. 297.

Digitized by Google

Digitized by Google

Digitized by Google

Digitized by Google

Digitized by Google

Fig. 1.

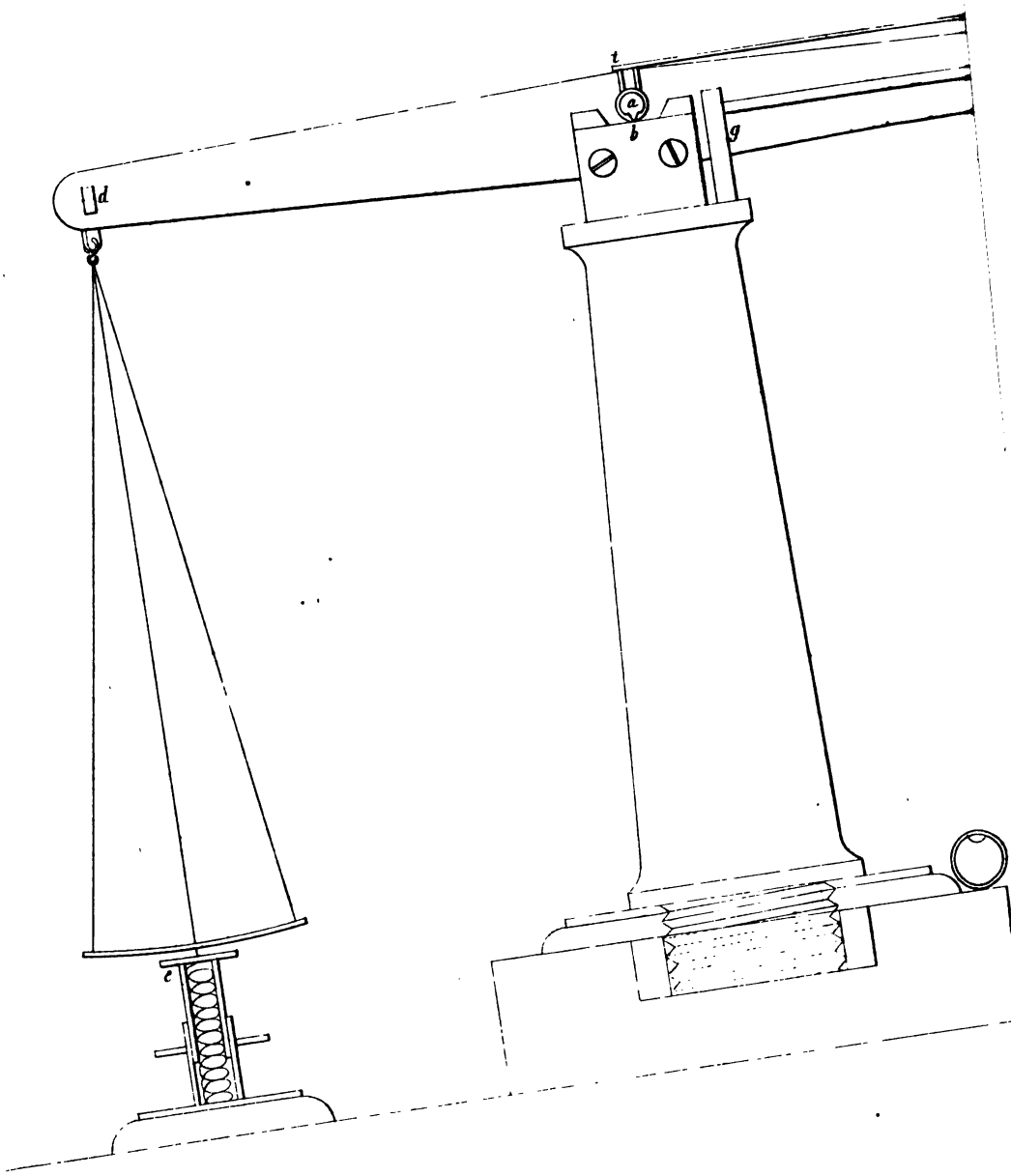

Digitized by Google

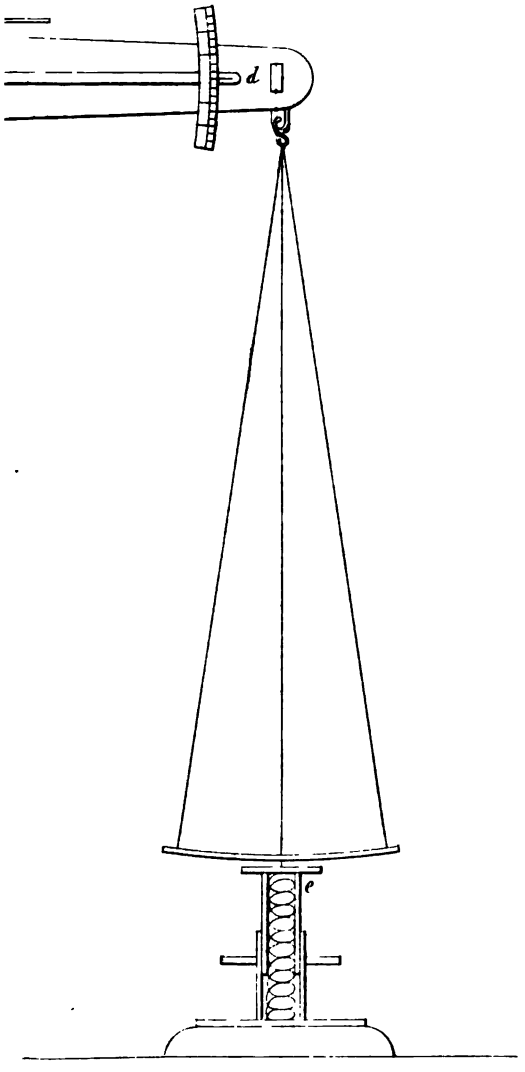

Fig. 4.

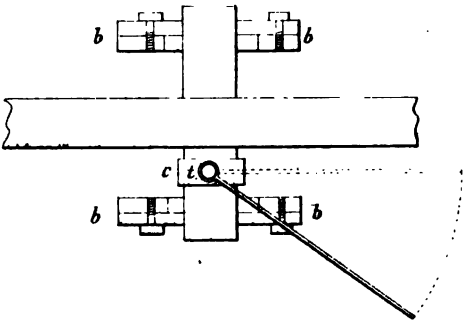

Fig. 2.

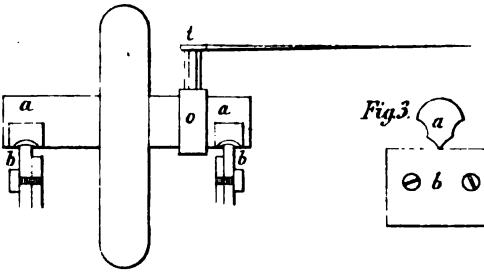

Fig. 3.

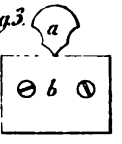

Digitized by Google

Digitized by Google

Digitized by Google

Digitized by Google

Cazin's
Electrodynamische Wage.

Fig. 1.

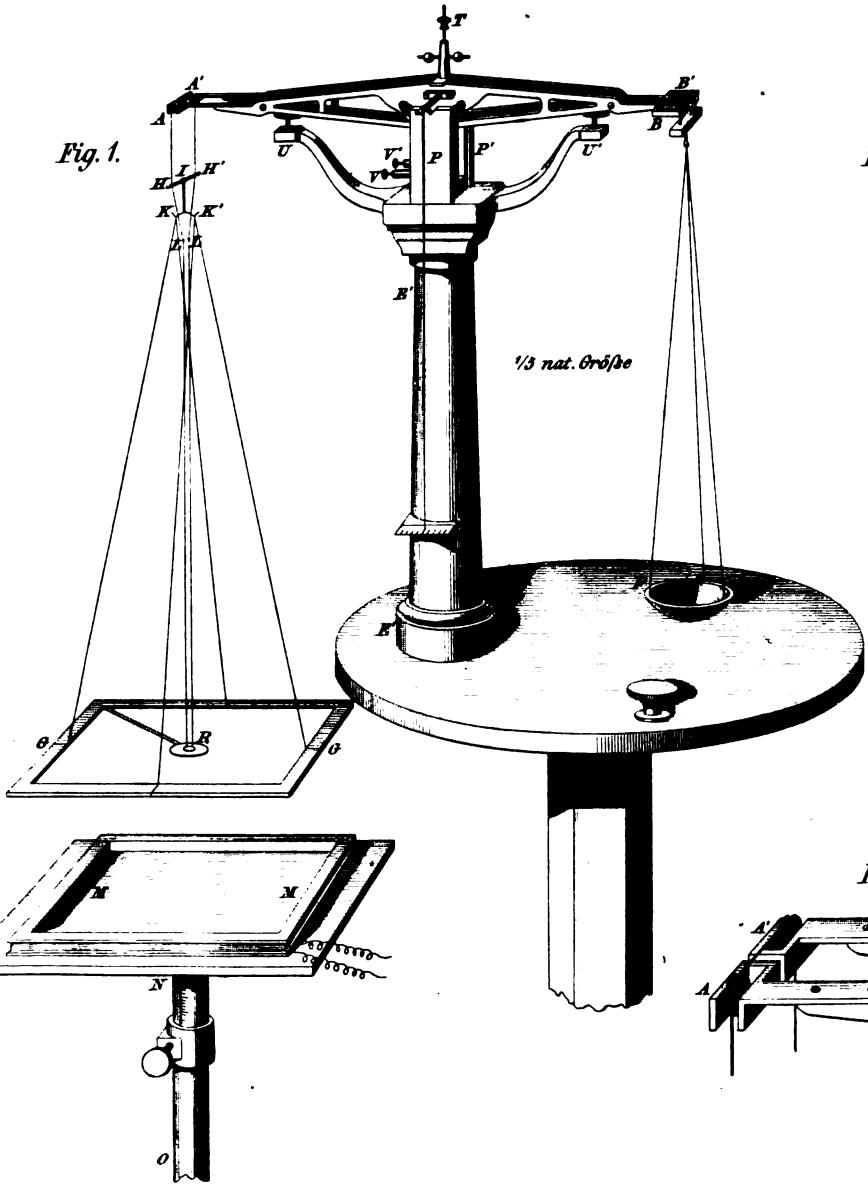

Fig. 3.

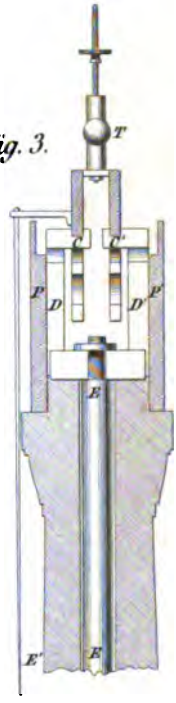

Fig. 2.

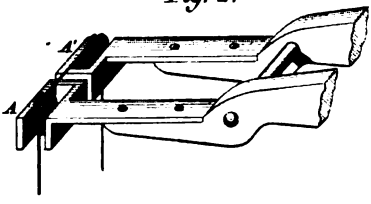

H. Bruch s.

Digitized by Google

Digitized by Google

Digitized by Google

Digitized by Google

Digitized by Google

Fig. 1.

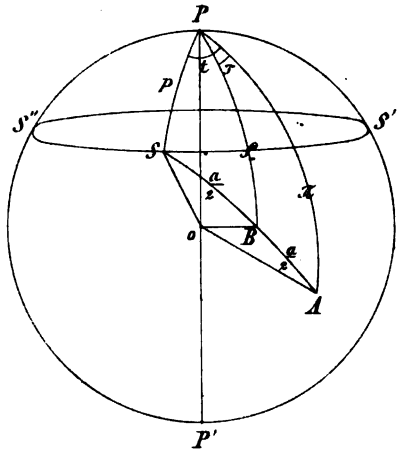

Fig. 4.

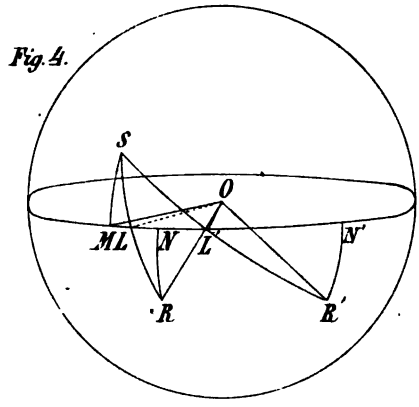

Fig. 3.

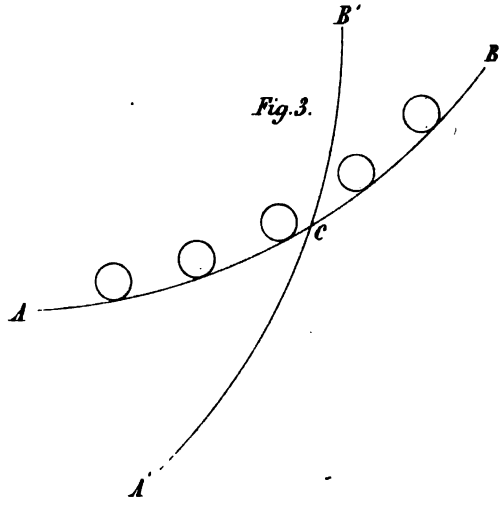

Digitized by Google

Fig. 2.

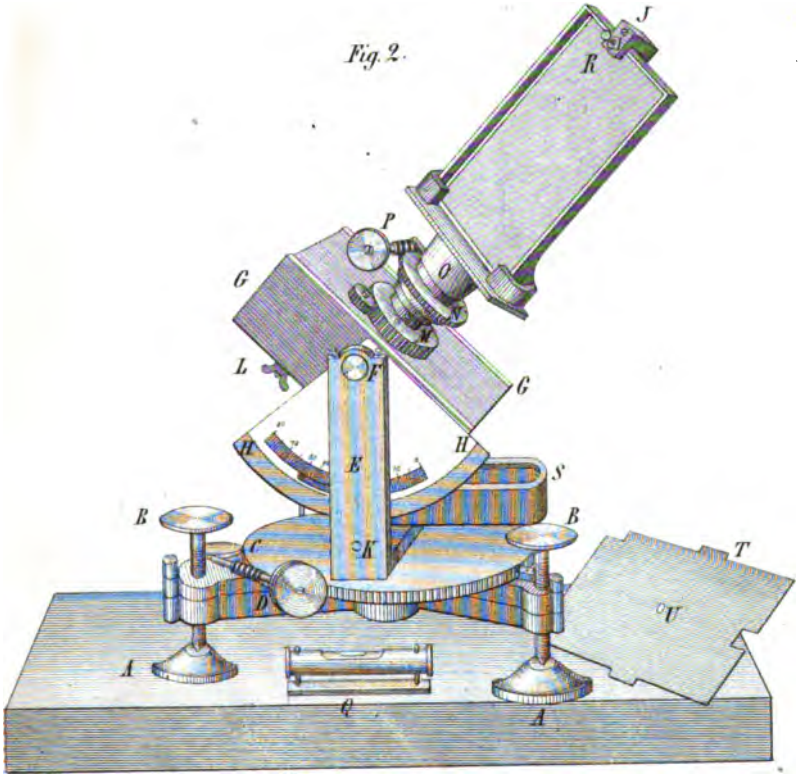

Digitized by Google

Digitized by Google

Digitized by Google

Digitized by Google

Digitized by Google

Digitized by Google

Fig. 1a

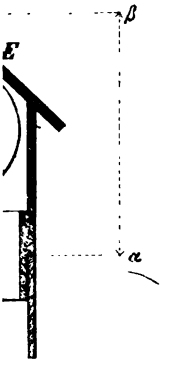

ig. 3.

ig. 4.

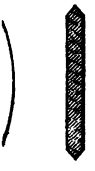

Fig. 5.

Digitized by Google

Digitized by Google

Digitized by Google

Digitized by Google

Digitized by Google

Digitized by Google

Digitized by Google

Digitized by Google

Fig. 4.

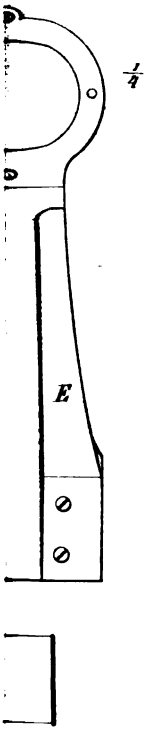

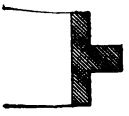

Digitized by Google

Digitized by Google

Digitized by Google

Digitized by Google

Digitized by Google

Digitized by Google

Digitized by Google

Digitized by Google

Digitized by Google

Das Rohr ist 37 Fuß lang, hat einen Durchmesser von 4 Fuß 3 Zoll und 16 Rippen. Jede Rippe ist 5 Zoll breit, die Zwischenräume betragen 4. 9 Zoll. Die Dicke der Rippen ist im unteren Durchschnitt des Rohres 1/4 Zoll, im oberen Durchschnitte 3/16 Zoll. Die Höhe der Declinationsaxe über der Kreisplattform beträgt 11 Fuß 3 Zoll. Die geographische Breite ist 35° 55'.

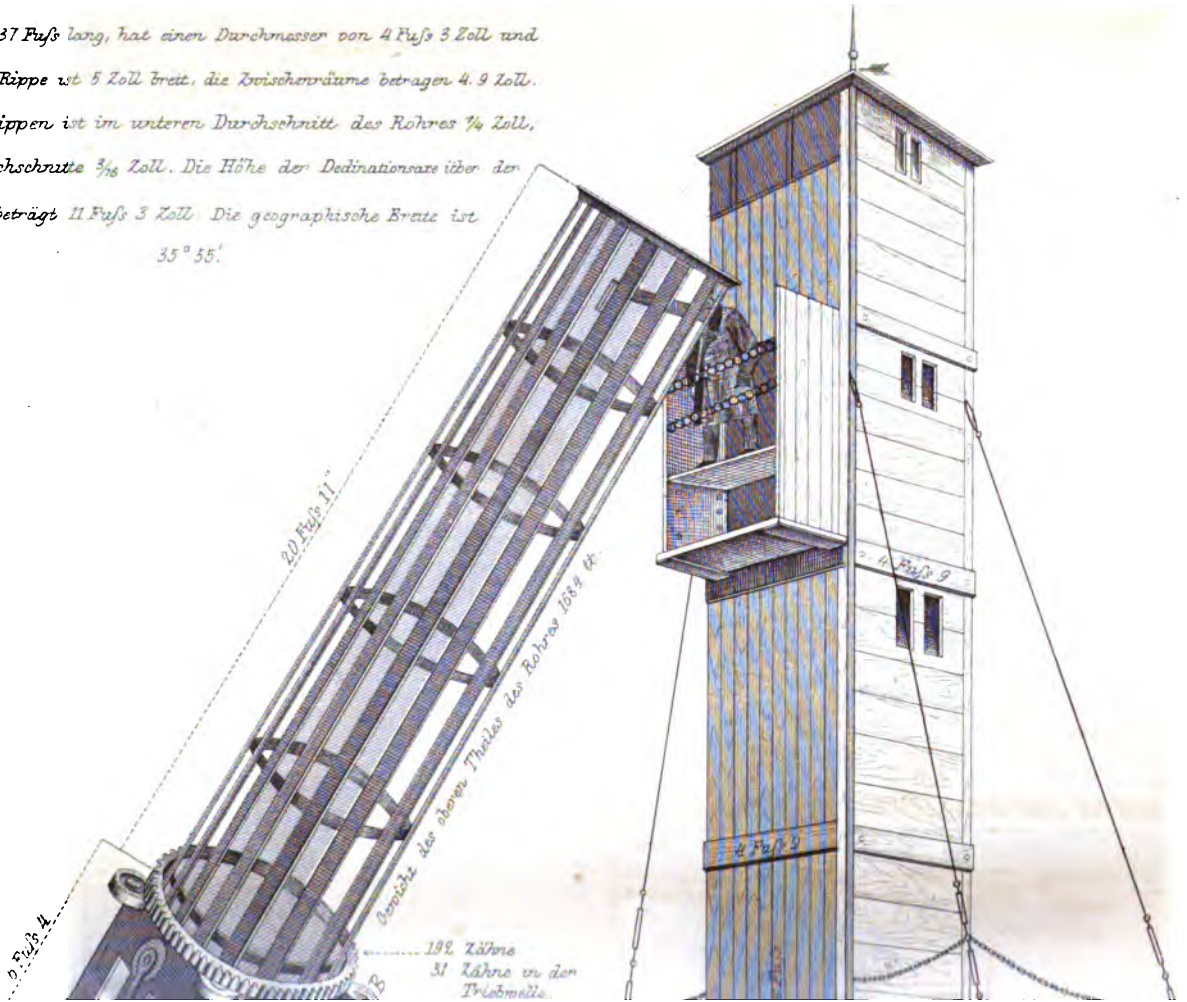

Digitized by Google

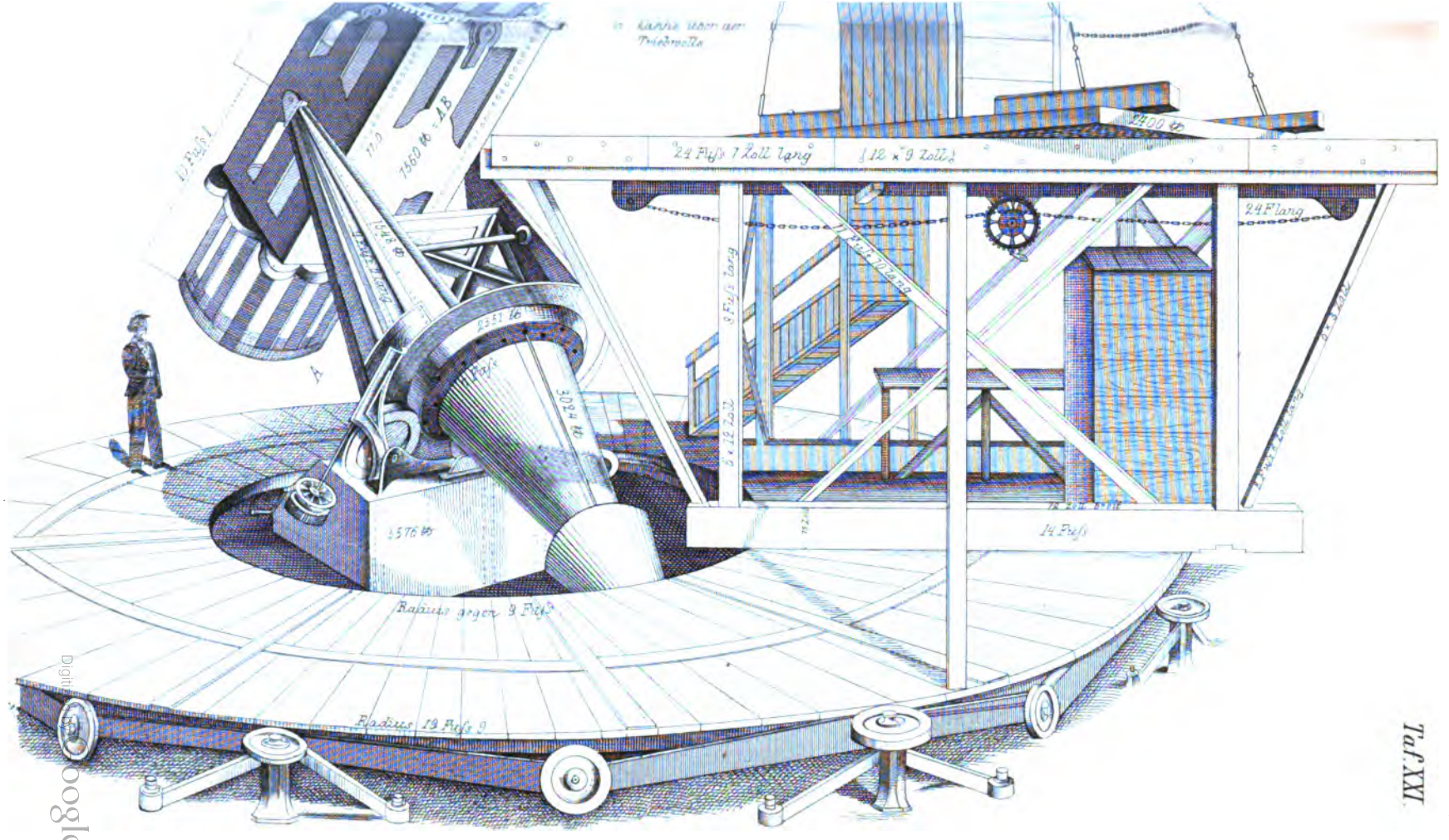

Tab. XXI.

Digitized by Google

Digitized by Google

Digitized by Google

Digitized by Google

Digitized by Google

Digitized by Google

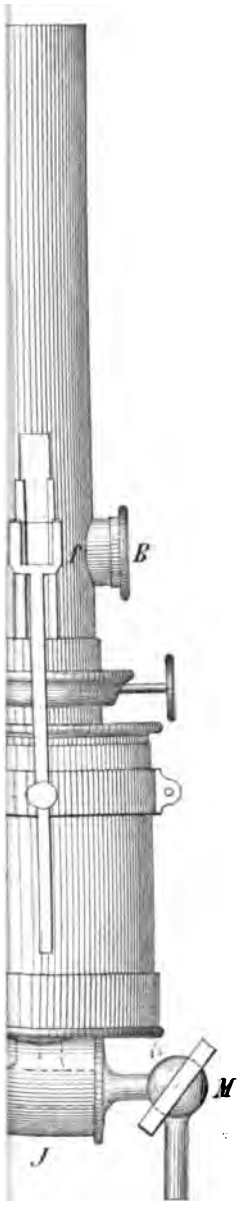

Digitized by Google

Digitized by Google

Digitized by Google

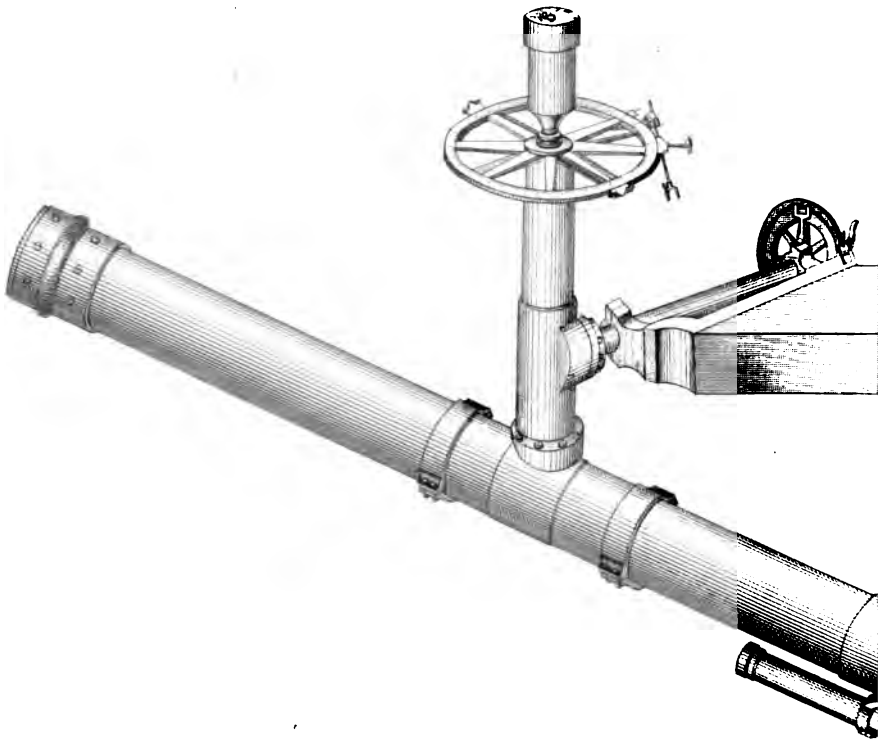

Digitized by Google

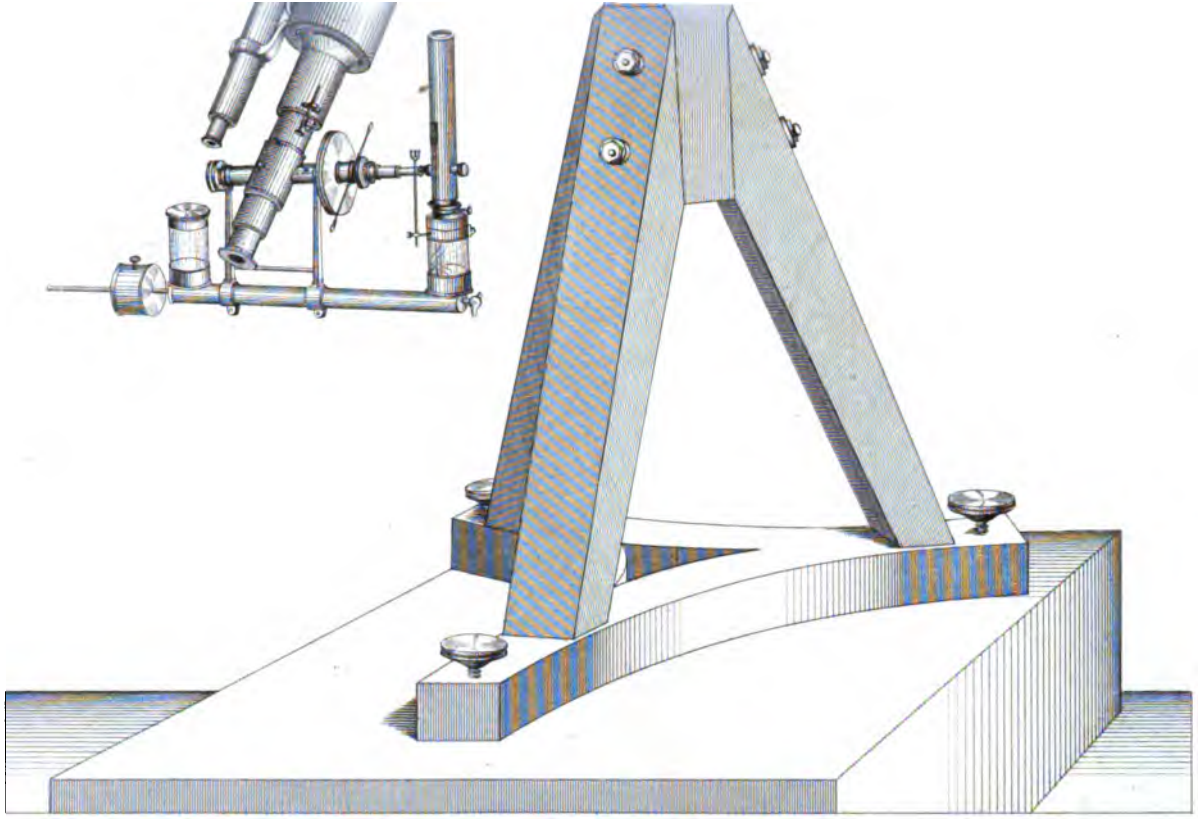

Totalansicht des Zöllner'schen Astrophotometers

in Verbindung mit dem sechsfüssigen Refractor der Leipziger Sternwarte.

Digitized by Google

Digitized by Google

Digitized by Google

Digitized by Google

Digitized by Google

Digitized by Google

Digitized by Google

Digitized by Google

Digitized by Google

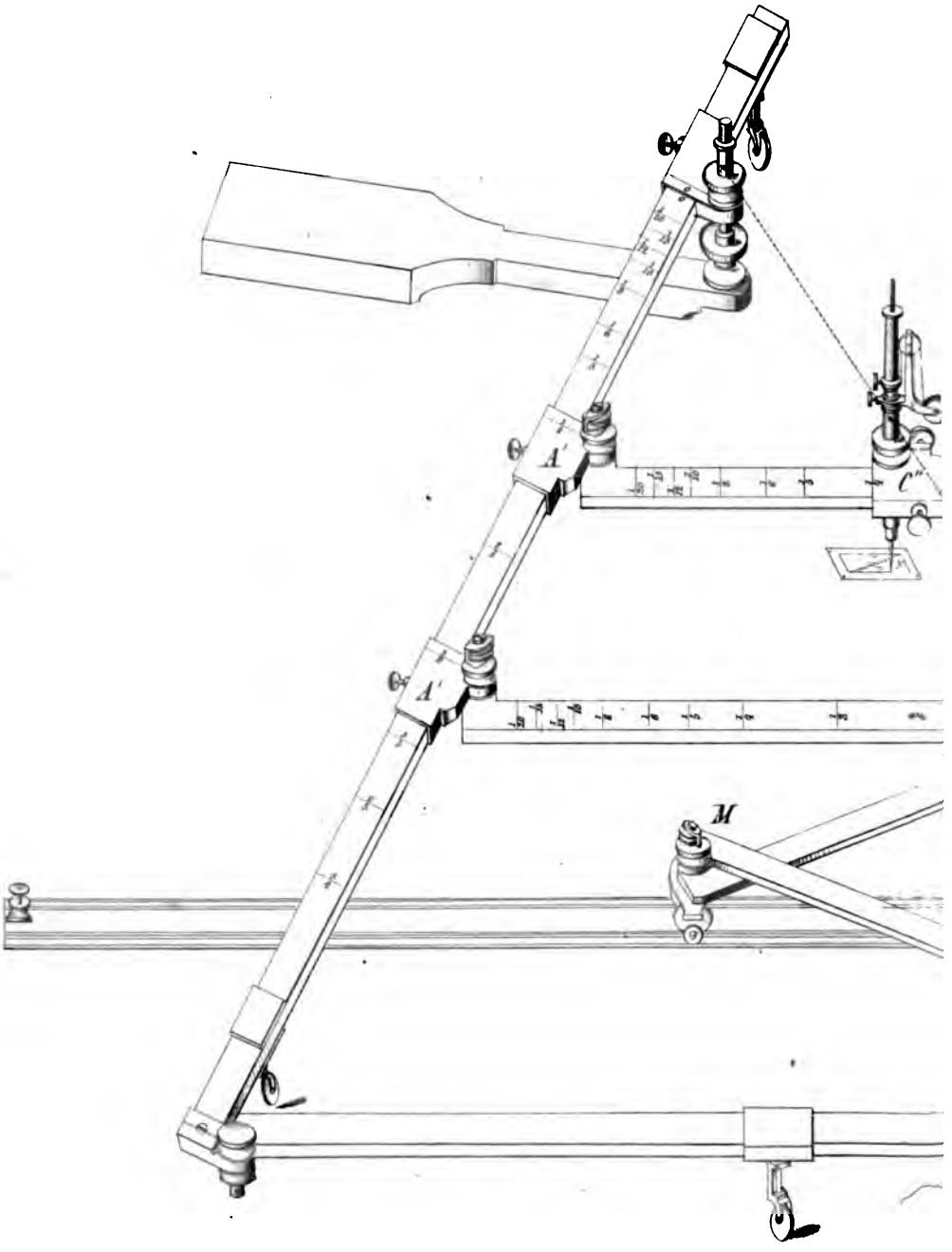

Digitized by Google

Pantograph von Gavard in Paris.

Fig. 34.

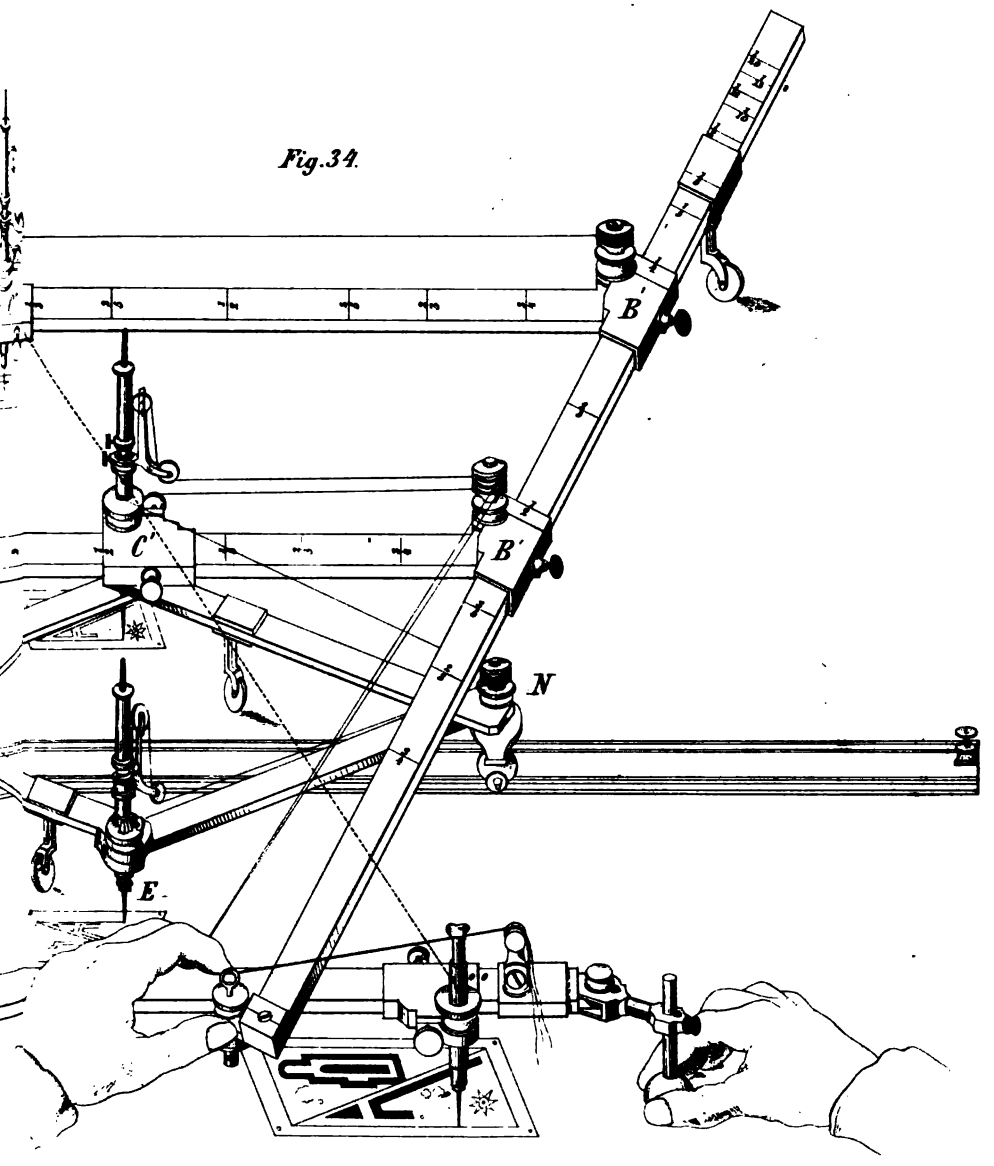

Digitized by Google

Digitized by Google

Digitized by Google

Digitized by Google

Digitized by Google

Digitized by Google

Digitized by Google

Digitized by Google

Digitized by Google

Digitized by Google

Digitized by Google

Fig. 11.

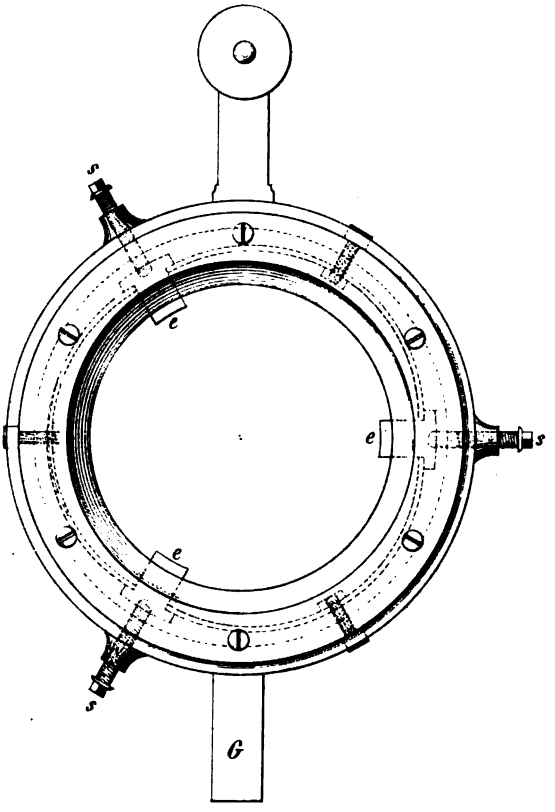

Fig. 12.

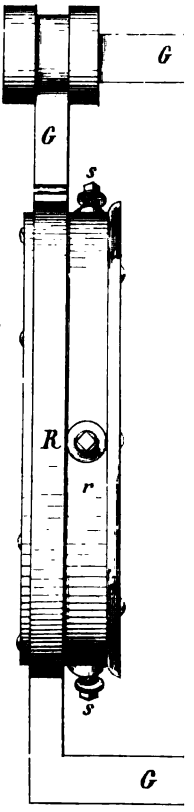

Fig. 15.

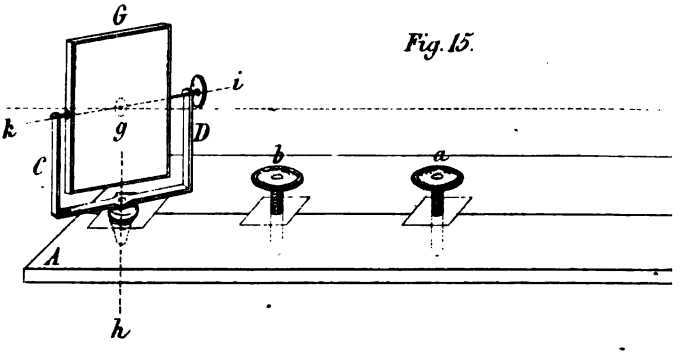

Digitized by Google

Fig. 13.

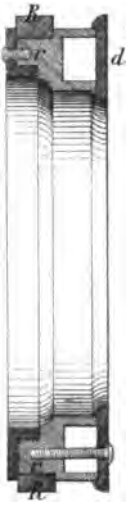

Fig. 14.

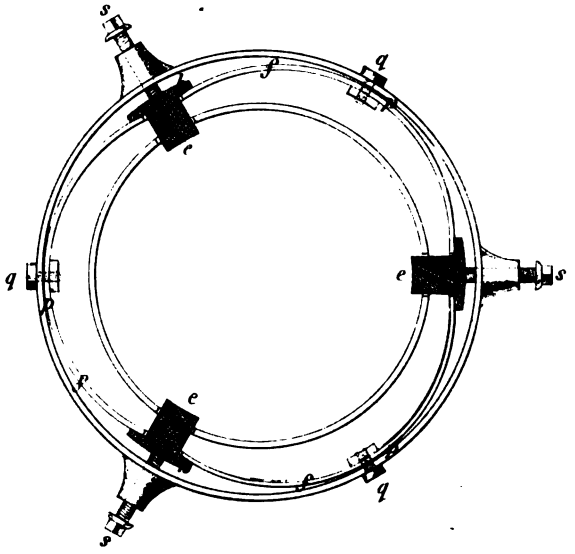

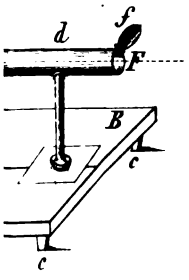

Digitized by Google

Digitized by Google

Digitized by Google

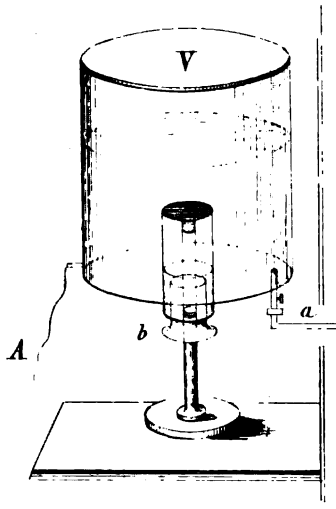

Fig. 3.

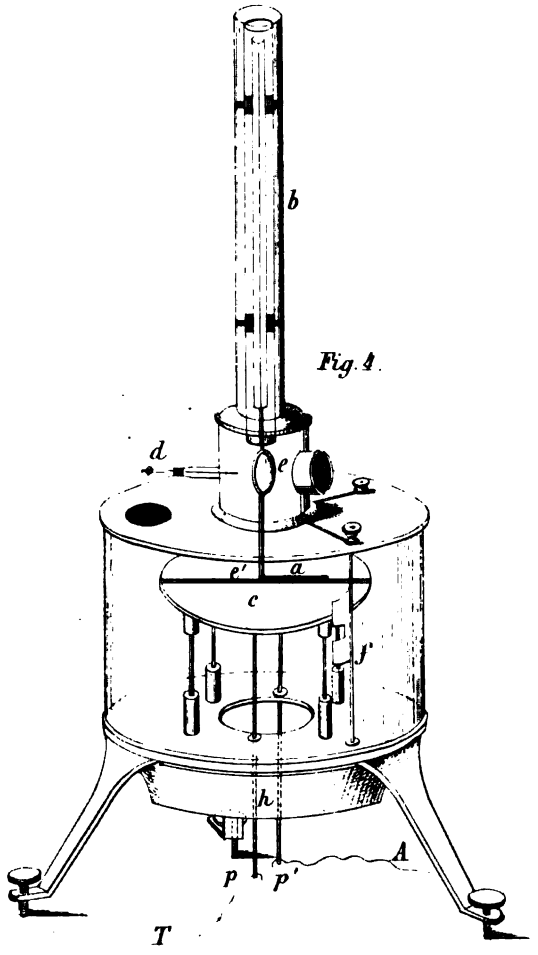

Fig. 4.

Digitized by Google

Fig. 1.

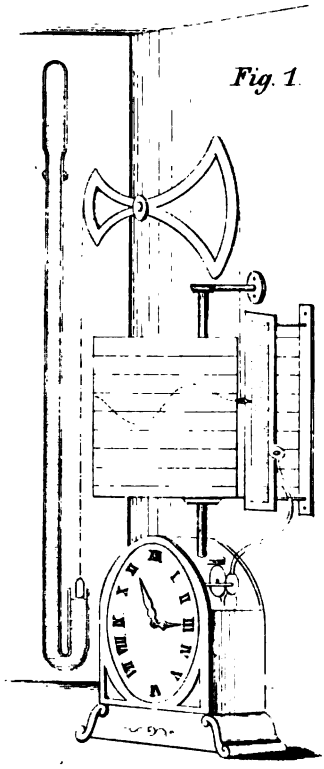

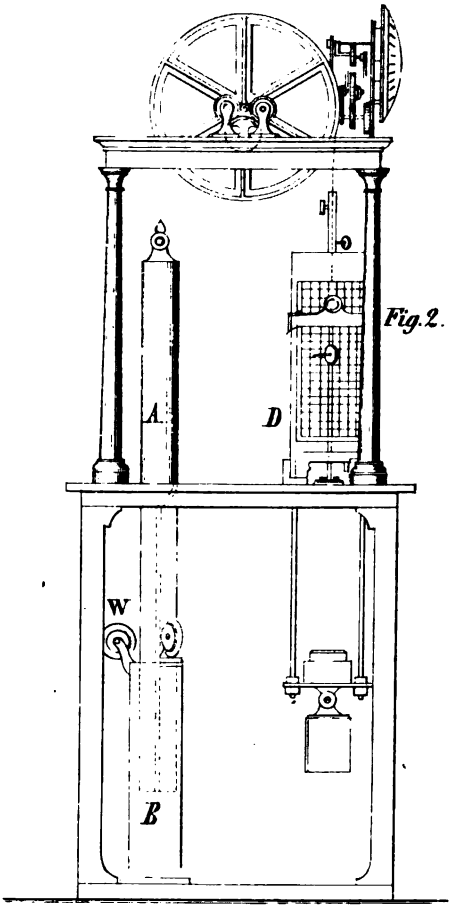

Fig. 2.

Fig. 5.

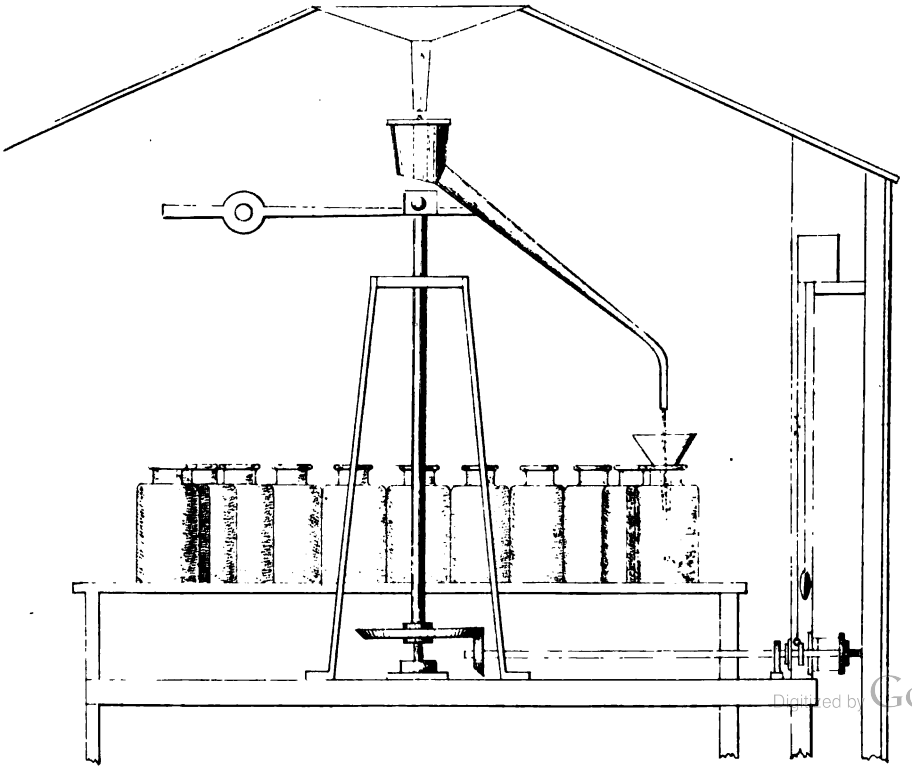

Digitized by Google

Digitized by Google

Digitized by Google

Digitized by Google

Digitized by Google

Digitized by Google

Digitized by Google

Digitized by Google

DEC 30 1880

FEB 2

Digitized by Google

Digitized by Google